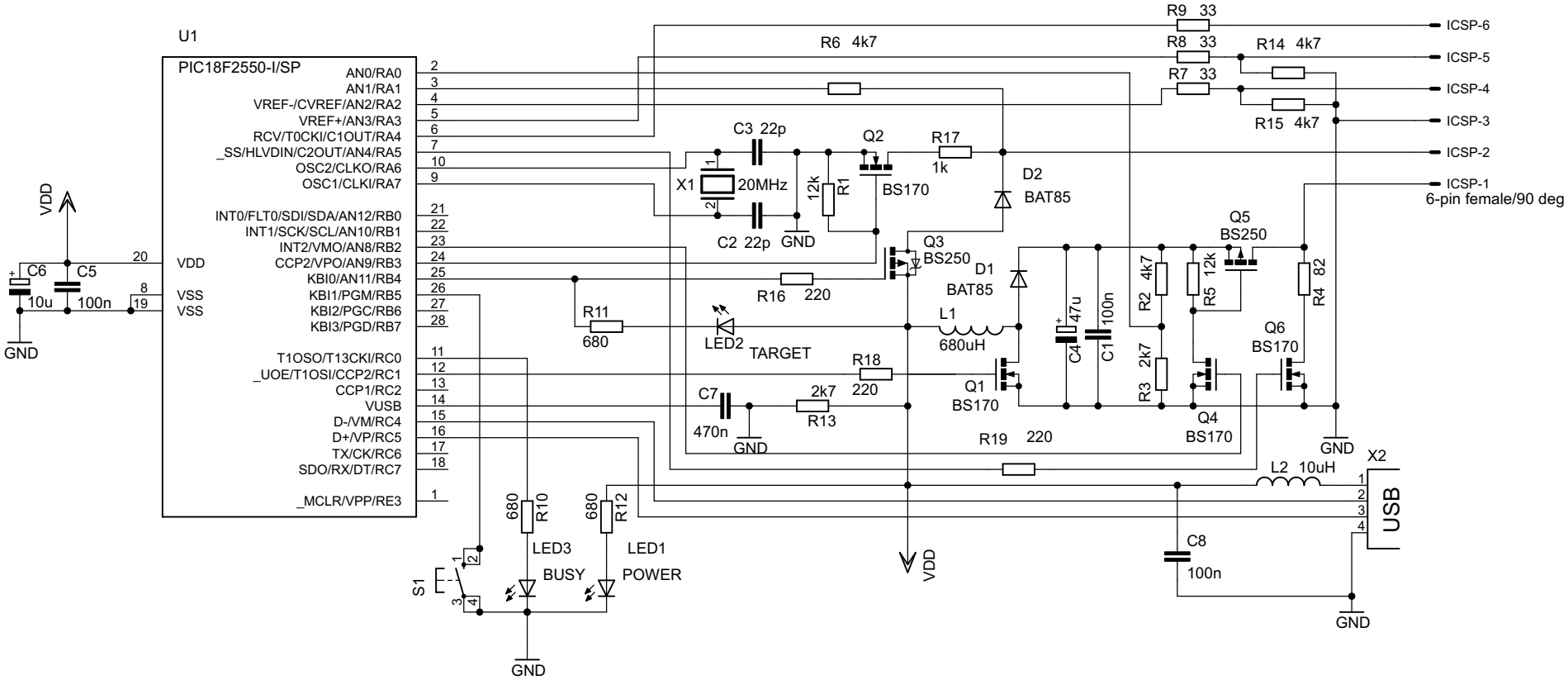
U1
PIC18F2550-I/SP
AN0/RA0
AN1/RA1
VREF-/CVREF/AN2/RA2
VREF+/AN3/RA3
RCV/T0CKI/C1OUT/RA4
_SS/HLVDIN/C2OUT/AN4/RA5
OSC2/CLKO/RA6
OSC1/CLKI/RA7
INT0/FLT0/SDI/SDA/AN12/RB0
INT1/SCK/SCL/AN10/RB1
INT2/VMO/AN8/RB2
CCP2/VPO/AN9/RB3
KBI0/AN11/RB4
KBI1/PGM/RB5
KBI2/PGC/RB6
KBI3/PGD/RB7
T1OSO/T13CKI/RC0
_UOE/T1OSI/CCP2/RC1
CCP1/RC2
VUSB
D-/VM/RC4
D+/VP/RC5
TX/CK/RC6
SDO/RX/DT/RC7
_MCLR/VPP/RE3
VDD
VSS
VSS
VDD
C6
10u
C5
100n
GND
R9 33
R8 33
R7 33
R6 4k7
R14 4k7
R15 4k7
ICSP-6
ICSP-5
ICSP-4
ICSP-3
ICSP-2
ICSP-1
6-pin female/90 deg
C3 22p
X1
20MHz
C2 22p
GND
12k
R1
Q2
BS170
R17
1k
D2
BAT85
Q3
BS250
D1
BAT85
R16 220
R11
680
LED2
TARGET
L1
680uH
R18
220
Q1
BS170
C7
470n
GND
2k7
R13
R19 220
C4
47u
C1
100n
R2 4k7
R3 2k7
R5 12k
Q4
BS170
Q5
BS250
R4 82
Q6
BS170
GND
L2 10uH
X2
USB
C8
100n
GND
680
R10
LED3
BUSY
680
R12
LED1
POWER
S1
GND
VDD